Model
# 1930ES
SCISSOR LIFTS

### MORE ECONOMIC
- Electric power for zero emissions and near-silent running indoors.

### MORE PRODUCTIVE
- Boost efficiency with direct electric drive.

### MORE ACCESS
- Get into more places with compact dimensions and precise control system.

### SMART DESIGN
- Enjoy industry leading upcycles so you can work longer with higher productivity.

## Standard Features

- 0.90 m roll-out deck extension
- Fold Down Handrails
- Half swing gate
- Removable platform console box
- Lanyard attach points
- Full proportional drive joystick control with integral thumb steer switch
- Proportional lift/lower speed control
- Joystick enable for lift and drive
- Load sensing system
- Automatic positive traction
- Programmable "Personality" settings
- On-board self-diagnostic testing
- Swing-out battery/electrical compartment doors
- 20 amp automatic battery charger
- Dual motor direct electric front wheel drive & steer
- Dual wheel automatic brakes
- Emergency brake release
- Pothole protection system
- AC cable to platform
- Battery condition indicator
- Hour meter
- Lubrication free scissor arm bushings
- Scissor maintenance prop
- Manual descent
- Horn
- Slope alarm and light
- Tie down lugs
- Fork lift pockets

## Standard Specifications

| | |
|---|---|
| Tyres (Non-Marking Solid) | 323 x 100 |
| Drive | 24V Electric 6 kW |
| Deep Cycle Batteries | 4 x 6V 220 A/hr |
| Charger (120/240V – 50/60HZ) | 20 Amp Automatic |
| Hydraulic System | 8.3 L |

## Accessories & Options

- 13mm air line to platform
- Platform work-lights
- 220 A/hr AGM Batteries
- Lifting lugs
- All motion alarm
- Descent alarm
- Alarm package [1]
- Platform padding
- Workstation c/w 12V outlet
- Workstation w/o 12V outlet
- Amber strobe light
- Euro Plug & Socket
- Synthetic Biodegradable Hydraulic Oil
- Electrician Tree
- Special paint colour

[1] Includes all-motion alarm + amber strobe light.

Certain options or country standards may increase weight and/or dimensions.

Model
# 1930ES
SCISSOR LIFTS

## Performance

| | |
|---|---|
| • Working Height | 7.72 m |
| • Platform Height – Elevated | 5.72 m |
| A. Stowed Height | 1.98 m |
| B. Platform Railing Height | 1.10 m |
| C. Stowed Height (Rails Folded) [1] | 1.59 m |
| D. Platform Size (W x L) | 0.76 m x 1.87 m |
| E. Deck Extension | 0.90 m |
| F. Overall Width | 0.76 m |
| G. Overall Length | 1.87 m |
| H. Wheelbase | 1.60 m |
| I. Ground Clearance | 0.09 m |
| • Platform Capacity [2] | 230 kg |
| • Capacity on Optional Deck Extension | 120 kg |
| • Lift/Lower Time | 20/30 sec. |
| • Maximum Drive Height | 5.72 m |
| • Machine weight [3] | 1,565 kg |
| • Maximum Ground Bearing Pressure | 8.73 kg/cm² |
| • Drive Speed - Lowered | 4.8 km/h |
| • Gradeability | 25% |
| • Turning Radius – Inside | Zero |
| • Turning Radius – Outside | 1.75 m |

[1] Folding rails standard on all ES models in CE spec.

[2] Capacities shown are maximum with 2 persons indoor on all models. Outdoor ratings are:
1930ES – 1 person / 120 kg ; 2030ES – 1 person / 160 kg ; 2646ES – 2 person / 230 kg ; 3246ES – 1 person / 320 kg.

[3] Certain options or country standards may increase weight and/or dimensions.

## Dimensions

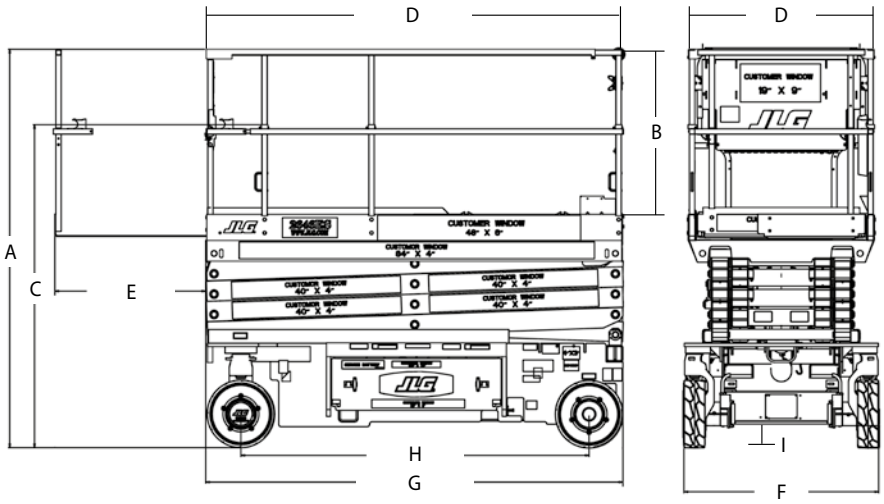


## IMPORTANT

JLG is continually researching and developing products and reserves the right to make modifications without prior notice. All data in this document is indicative. Certain options or country standards will increase weight. Specifications may change to meet country standards or with the addition of optional equipment.


**JLG EMEA BV**

Polaris Avenue 63
2132 JH Hoofddorp
The Netherlands
Tel: +31 (0)23 565 5665
Fax: +31 (0)23 557 3750
**www.jlg.com**



Due to continuous product improvements, JLG Industries reserves the right to make specification and/or equipment changes without prior notification.

**An Oshkosh Corporation Company**